THIS DRAWING AND SPECIFICATIONS ARE THE PROPERTY OF THE PERFORMANCE WINDOW GROUP. THEY ARE ISSUED IN STRICT CONFIDENCE AND SHALL NOT BE REPRODUCED, COPIED OR USED AS THE BASIS FOR MANUFACTURING WITHOUT WRITTEN PERMISSION.

STAINED FINISH & RAL PAINT FINISH FOR DOOR PANELING**

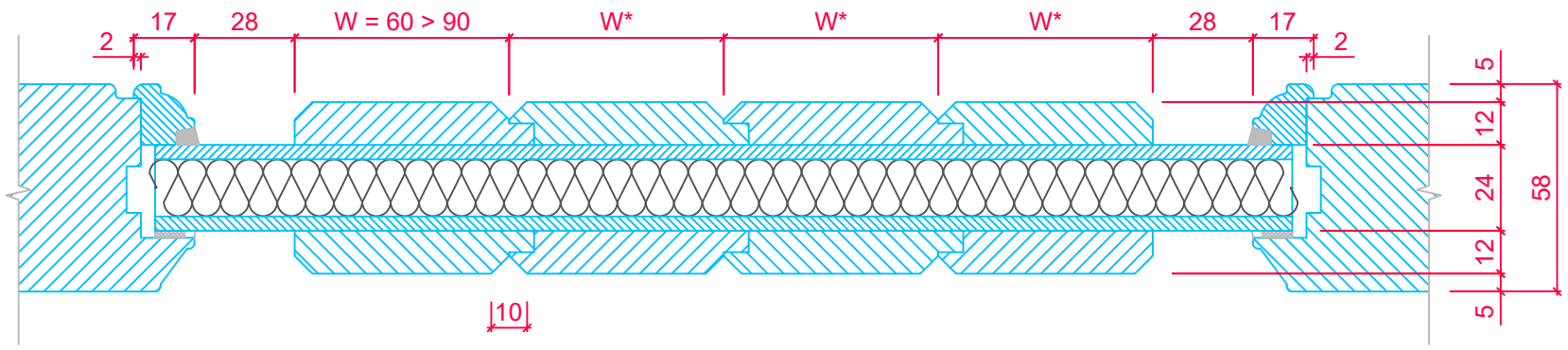

STAINED FINISH & RAL PAINT FINISH WITH VISION PANEL AND DOOR PANELING**

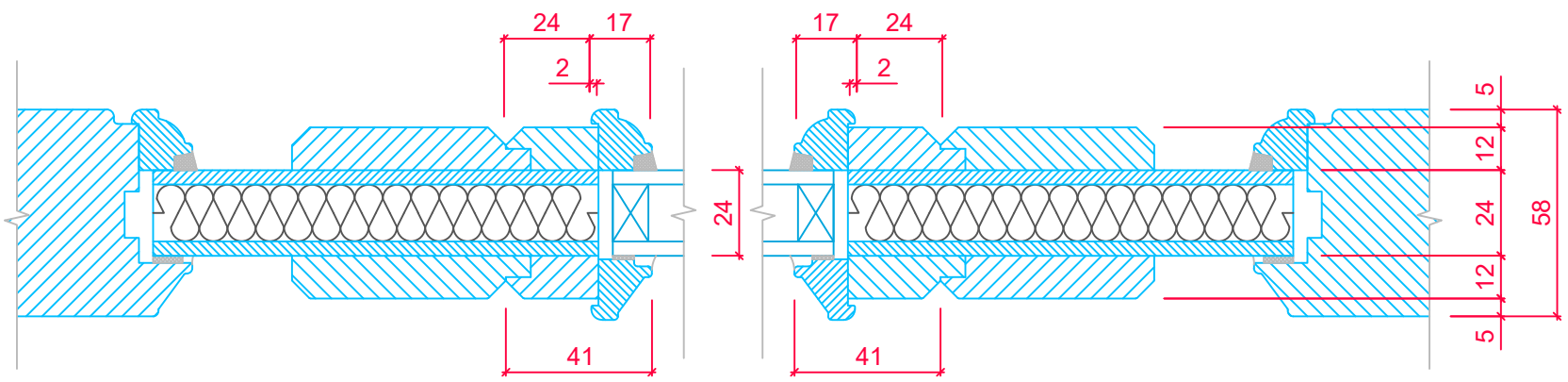

STAINED AND RAL PAINT FINISHES WITH RAISED AND FIELDED PANEL

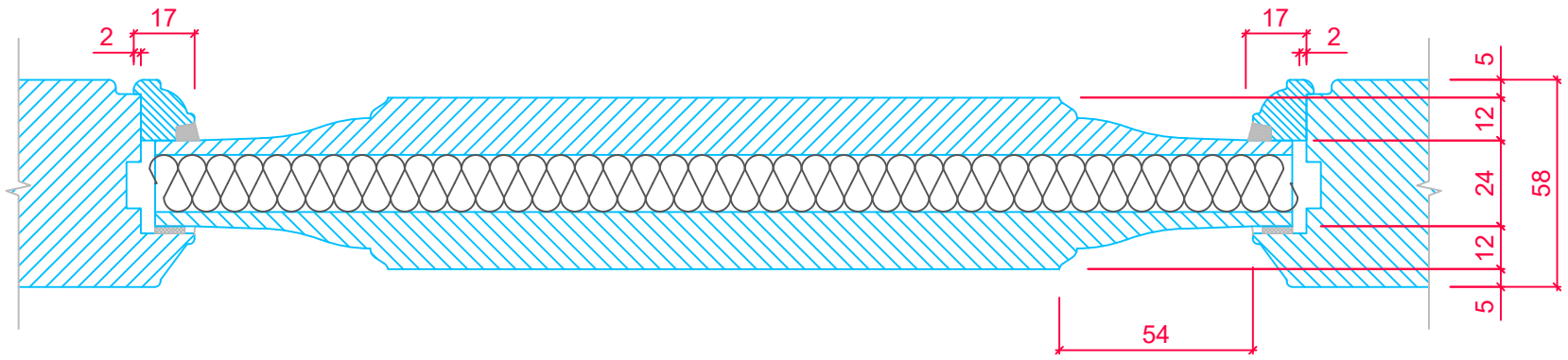

STAINED AND RAL PAINT FINISHES WITH FLAT PANEL

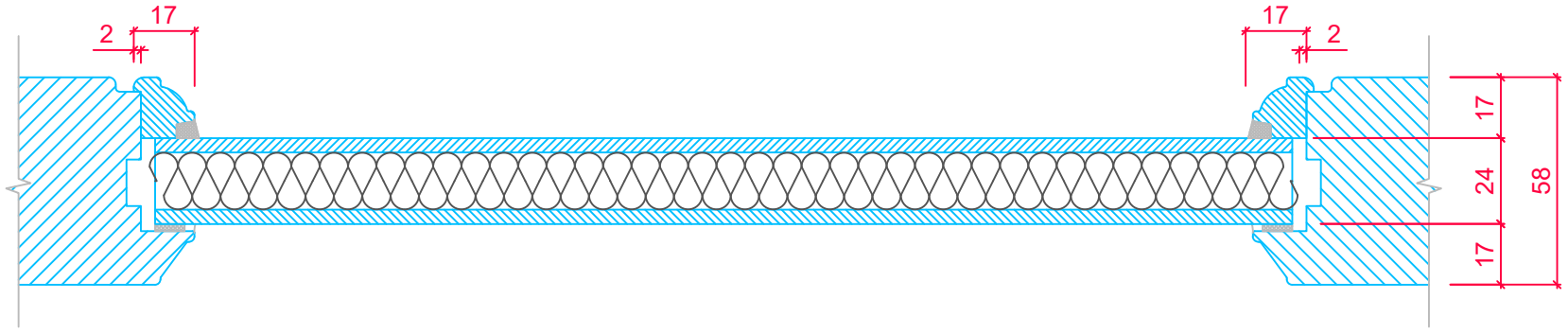

TIMBER WINDOWS EST. 2004

TOLERANCES
UNLESS OTHERWISE SPECIFIED

ALL DIMENSIONS IN MM
ALL LINEAR DIMENSIONS ±0.4
ALL ANGLE DIMENSIONS ±0.5°
BREAK ALL SHARP EDGES 0.5

PRODUCT RANGE:
ENTRANCE DOOR - OPEN IN (Ovolo)
24mm Unit

TITLE
HORIZONTAL SECTION DETAIL
- PANELING AND VISION PANEL OPTIONS

Rev B

DRAWN BY:	LH	DATE DRAWN:	01/03/2017	SCALE:	1:2

ALL MEASUREMENTS ARE FINISHED DIMENSIONS IN MM. DO NOT SCALE DRAWING! Din A3